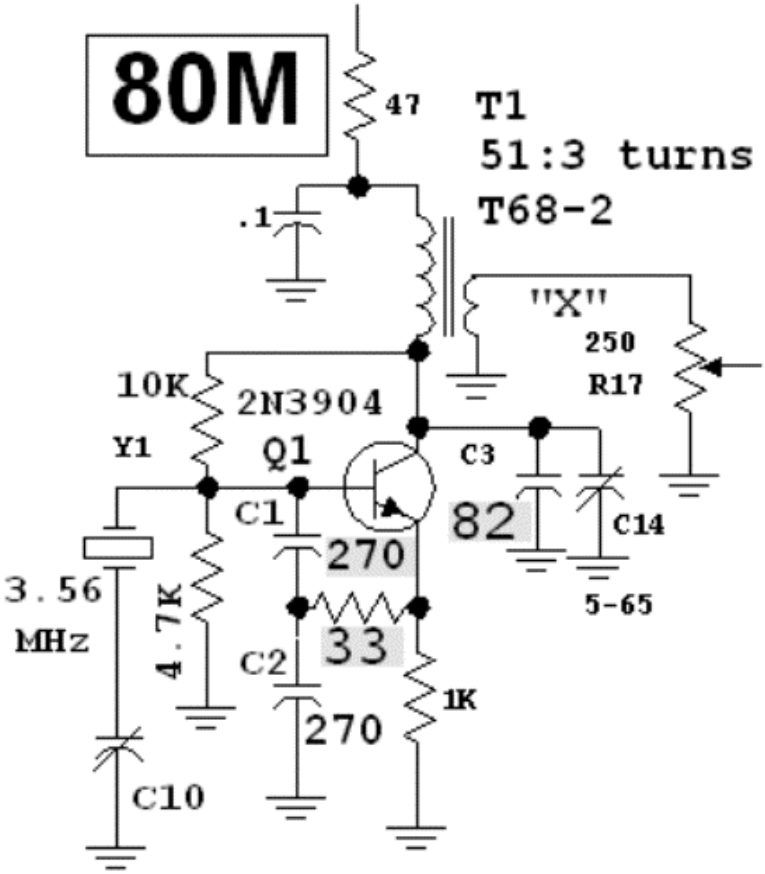

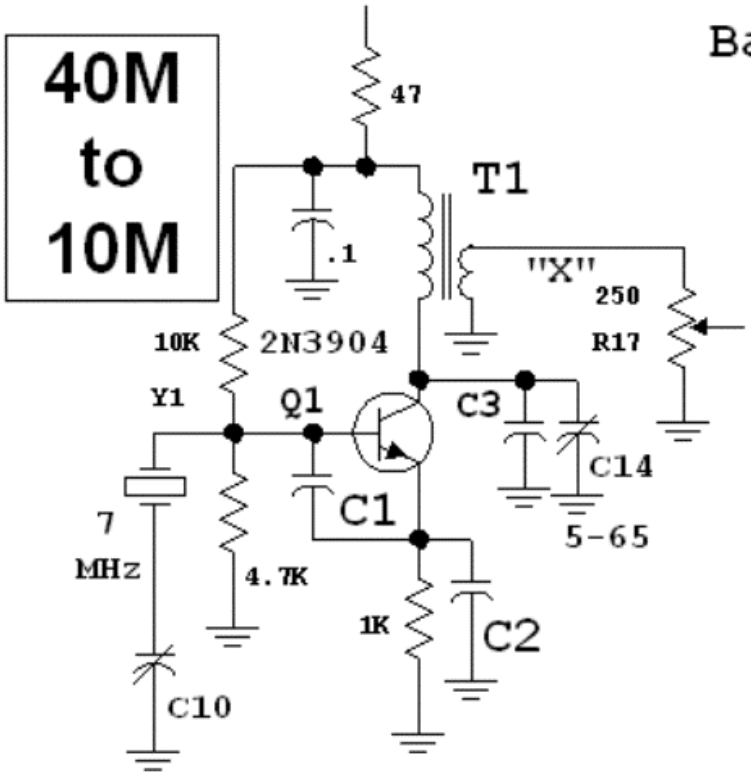

Band	C1	C2	C3
40	390	100	82
30	390	100	0
20	390	100	0
17	100	33	0
15	100	33	0
12	33	18	0
10	33	18	0

Updated Oscillator Schematics